TR 47-50-53-56

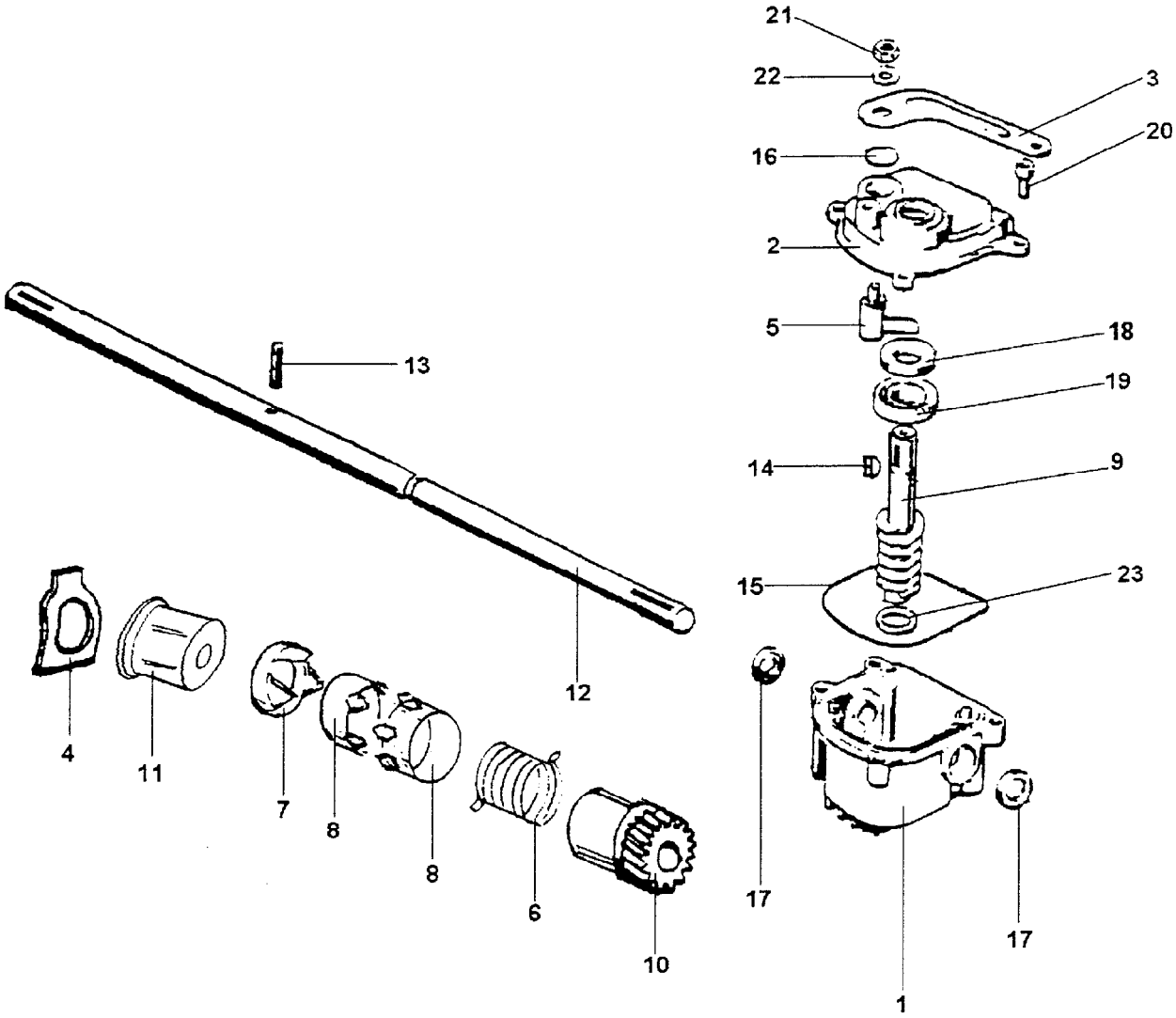

MA.RI.NA.

TR 47-50-53-56

(Old < 6/1996)

POS.	CODICE	I	F	D	GB	E	47 S TR 47	53 S TR 53	50 S-56 S TR 56
1	CP070100	SCATOLA	BOITE	GETRIEBE	GEAR BOX	CAJA	1	1	1
2	CP070110	COPERCHIO	COUVERCLE	SCHUTZ	COVER	TAPA	1	1	1
3	CP070120	LEVA ESTERNA	LEVIER	STANGE	LEVER	LEVA	1	1	1
4	CP070130	LEVA	LEVIER	STANGE	LEVER	LEVA	1	1	1
5	CP070140	LEVA DI INNESTO	LEVIER	STANGE	LEVER	LEVA	1	1	1
6	CP070150	MOLLA	RESSORT	FEDER	SPRING	MUELLE	1	1	1
7	CP070160	SETTORE	SECTEUR	PLATTE	SECTOR	PLACA ALTURAS	1	1	1
8	CP070170	SETTORE	SECTEUR	PLATTE	SECTOR	PLACA ALTURAS	2	2	2
9	CP070180	VITE SENZA FINE L=94	VIS	SCHRAUBE	SCREW	TORNILLO	1	1	1
10	CP070190	INGRANAGGIO	PIGNON	GETRIEBE	PINION	ENGRANAJE	1	1	1
11	CP070196	MOZZO	PIVOT	ACHSE	PIN	EJE	1	1	1
12	CP070220	ALBERO TR 47	ARBRE TR 47	ACHSE TR 47	SHAFT TR 47	EJE TR 47	1		
12	CP070250	ALBERO TR 53	ARBRE TR 53	ACHSE TR 53	SHAFT TR 53	EJE TR 53		1	
12	CP070280	ALBERO TR 50/56/57	ARBRE TR 50/56/57	ACHSE TR 50/56/57	SHAFT TR 50/56/57	EJE TR 50/56/57			1
13	CP070310	SPINA	GOUPILLE	DORN	PIN	PASADOR	1	1	1
14	CP070315	CHIAVETTA	CLAVETTE	SCHLÜSSELCHEN	WOODRUFF KEY	CHAVETA	1	1	1
15	CP070320	ANELLO DI TENUTA	JOINTE	ÖLSCHUTZ	OIL SEAL	RETEN	1	1	1
16	CP070325	ANELLO DI TENUTA	JOINTE	ÖLSCHUTZ	OIL SEAL	RETEN	1	1	1
17	CP070330	ANELLO DI TENUTA	JOINTE	ÖLSCHUTZ	OIL SEAL	RETEN	2	2	2
18	CP070335	ANELLO DI TENUTA	JOINTE	ÖLSCHUTZ	OIL SEAL	RETEN	1	1	1
19	CP070340	CUSCINETTO	ROULEMENT	KUGELLAGER	BALL BEARING	COJINETE	1	1	1
20	CP070345	VITE	VIS	SCHRAUBE	SCREW	TORNILLO	4	4	4
21	CP070350	DADO	ÉCROU	MUTTER	KNOB	ESPARRAGO	1	1	1
22	CP070355	RONDELLA	RONDELLE	SCHEIBE	WASHER	ARANDELA	1	1	1
23	CP070360	RONDELLA	RONDELLE	SCHEIBE	WASHER	ARANDELA	1	1	1